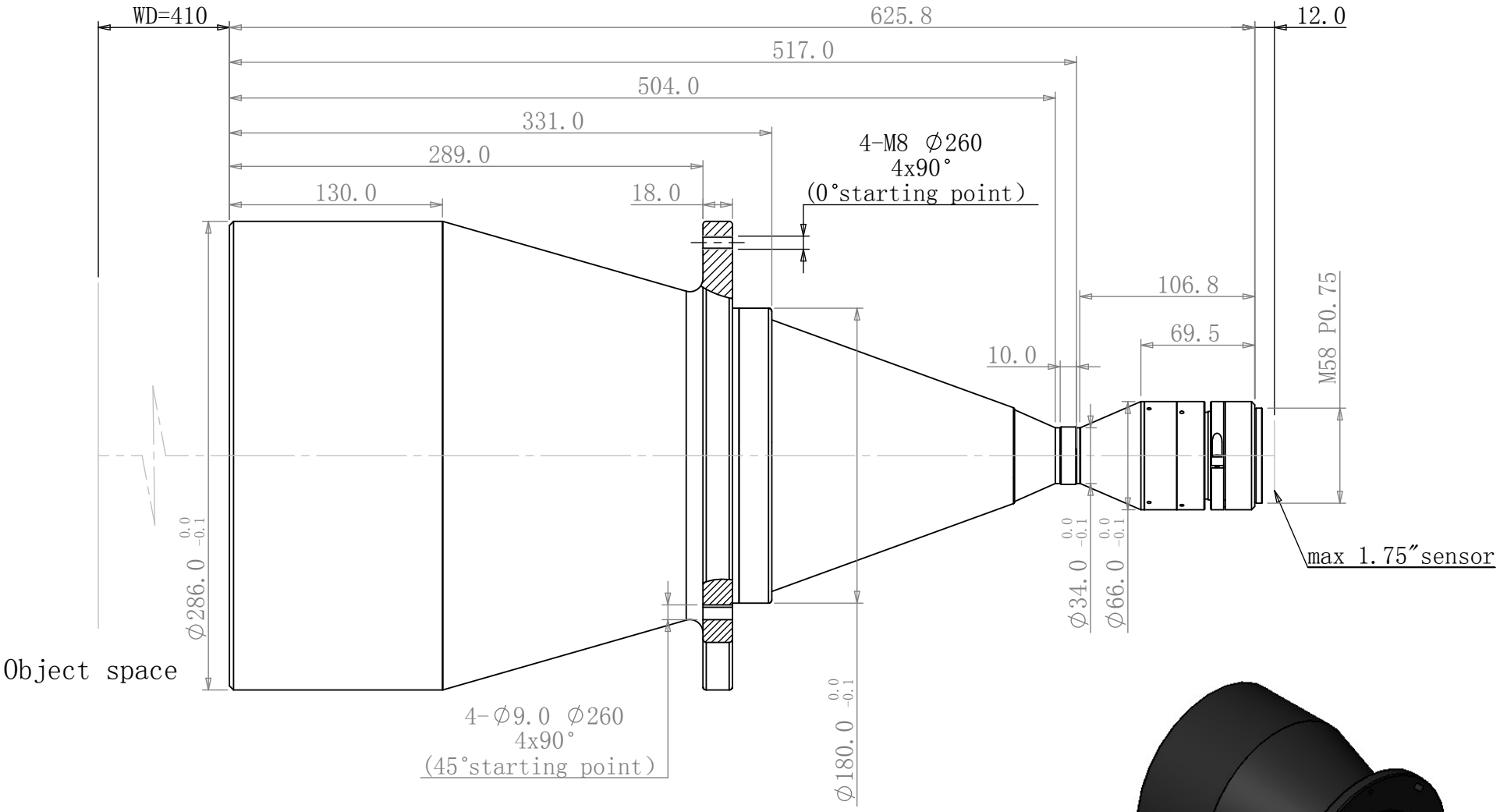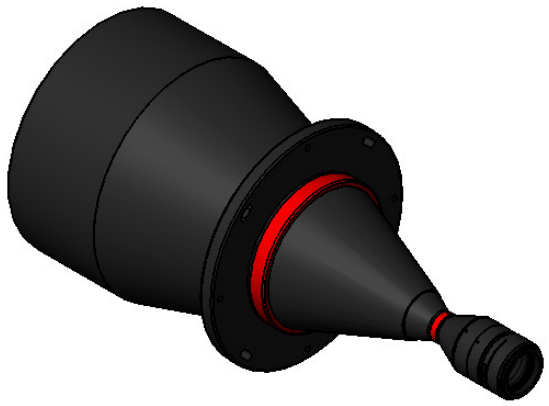DTCM175-240H-M58-AL